BENDING RADIUS FOR FIBER OPTIC CABLES AND CAT 6 AS PER MANUFACTURER'S SPECIFICATIONS AND TIA/EIA STANDARDS

METAL RACEWAY TO CONNECT ROOM ENTRANCE

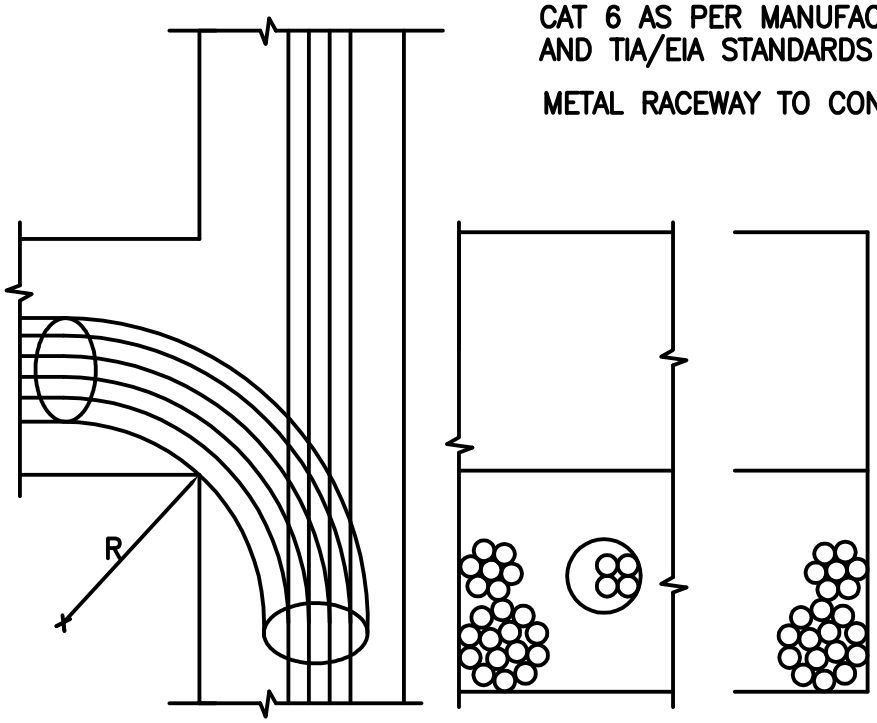

PLAN VIEW FRONT SECTION

NOTE:

- IF USING EXISTING NON-FIBER RATING FITTINGS USE APPROPRIATE FIBER INSERT.
- ALL NEW FITTINGS SHOULD BE FIBER RATED SURFACE MOUNTED METAL RACEWAY.

CHICAGO PUBLIC SCHOOLS
CAPITAL IMPROVEMENT PROGRAM
INFORMATION TECHNOLOGY SERVICES

INFRASTRUCTURE STANDARDS

CONDUIT ROOM ENTRANCE
CAPITAL IMPROVEMENT PROGRAM

NO.	DATE	REVISION	BY

DESIGNED CPS				SHEET NO.
DRAWN CPS				ED.854
CHECKED CPS	PROJECT NUMBER	SCALE	DATE	
APPROVED CPS		NONE	08/28/08	